TECH

SLUG FEST

WORDS: Stephen Kim
PICTURES: by the author

CHOOSING BETWEEN CUSTOM AND SHELF PISTONS FIRST REQUIRES UNDERSTANDING THE FUNDAMENTALS OF PISTON DESIGN

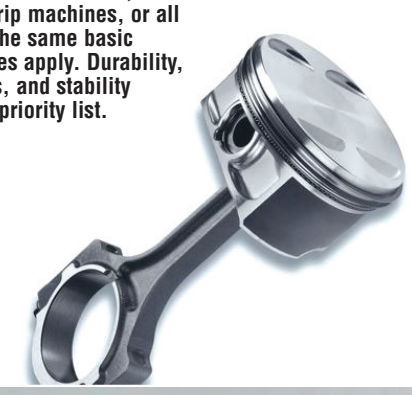

Pistons come in all shapes and sizes, but regardless of whether they're built for diesel trucks, dirt bikes, street/strip machines, or all out race cars, the same basic design principles apply. Durability, ring seal, mass, and stability always top the priority list.

Contrary to popular belief, Hell on earth isn't Newark, New Jersey. It's not sitting in the middle seat of a 737 between Kirstie Allie and Rosie O'Donnell, either. If given the choice of being reincarnated as a piston or a urinal cake, it would be a very tough call indeed. That's because the inner workings of an internal combustion engine are as hellish as it gets. With thousands of psi of cylinder pressure and over 1,500 degrees of exhaust gas temperate to contend with, pistons are literally on the front lines of fire and brimstone. To make matters worse, a piston must completely reverse direction at TDC (Top Dead Center) and BDC (Bottom Dead Center) with every single engine revolution. In a 7,000-rpm LS7 small-block, this madness goes down 70 times per second at pistons speeds approaching nearly 80 feet per second. Worst of all, if the pistons fail, they often take out the cylinder heads, connecting rods, and block with them. At the risk of pointing out the obvious, a racer's best bet is selecting a piston that's up to the challenge.

As cylinder pressure, heat, and rpm increase, so does the potential for catastrophic piston failure. One blown piston can destroy an entire long-block.

For popular engine combinations, off-the-shelf pistons are often the best choice due to their balance of durability, price, and availability. Arias stocks forged 2618 alloy GM Gen III/IV small-block pistons in a variety of compression heights for bore sizes ranging from 3.898- to 4.125 inches.

With the huge variety of quality aftermarket pistons that are available, however, picking the right one isn't as dummy-proof as it used to be. Likewise, an extreme racing application—whether it's a power adder combo subjected to intense cylinder pressure or a naturally aspirated screamer that lives or dies by ring seal and friction reduction—often demands more than what a standard off-the-shelf piston can offer. While aftermarket manufacturers are more than happy to carve out a set of custom pistons for you, racers seeking to quickly patch up their motors before the next event might not have time to wait in line. The question of whether a custom piston is the best choice, or if a shelf piston will suffice throws yet another monkey wrench into the equation.

Making that determination first requires understanding how a custom piston differs from a shelf piston, and making sense of those differences requires understanding the fundamentals of piston design. For power adder applications, custom pistons often utilize thicker skirts and ring lands. On the other hand, custom pistons for naturally aspirated combos focus on weight and friction reduction. Furthermore, factors such as forging density, wristpin mass, piston-to-wall clearance, valve relief depth, gas porting, and crown profile are all balanced to meet the specific needs of each engine combination. Surviving in Hell isn't easy, but fortunately the piston experts at Arias, JE, Mahle, and Ross are more than happy to explain how the multitude of piston design factors come into play.

FITMENT

In many instances, opting for a custom piston is simply a matter of fitment. As mass-produced products, off-the-shelf pistons target the largest and most popular engine combinations. That means you can find shelf pistons for a .030-over 350 small-block Chevy all day long, but pistons for a 5.300-inch bore space mountain motor with spread-port heads and 2.500-inch intake valves might be harder to find.

"With nearly 4,000 shelf pistons in our JE and SRP Pistons catalogs, we offer the majority of popular piston combinations off-the-shelf. However, many racing engines have unique combinations that require slight adjustments to the bore size, compression distance, crown volume, compression ratio, ring package, dome or dish shape, or most importantly, the thicknesses and clearances in critical areas," Sean Crawford of JE Pistons explains. "The biggest advantage of a custom piston is the ability to build the design around your specific application. This includes optimizing the crown of the piston for your cylinder head, customizing ring land and crown clearances and thickness, adjusting valve relief diameters and depths, and setting the ideal skirt panel thickness and finish. The resulting customization can provide an increase in horsepower and durability."

The key point is that while custom pistons have the potential to increase power output, that's not always the case. "The old adage of practice makes perfect definitely applies here. There is a false perception amongst customers that a custom piston is always better than a shelf-stocked piston," says Mahle Motorsports' Trey McFarland. "Although a custom piston can be made to better suit a specific application, the R&D and testing necessary to make this true is often cost-prohibitive. The large majority of the custom pistons being produced are actually modified versions of a shelf-stocked part. Any modification to a shelf-stocked design, other than bore size, will affect the consistency of the production process and potentially the integrity of the part. In most cases a custom piston should be viewed as a last option. If a custom piston is needed, keeping the modifications to only what is necessary will help maintain more of the consistency the manufacturer is capable of. Most performance and race parts are a compromise between performance, strength and cost, and manufacturers do their best to provide the optimum balance. When ordering a custom part, discuss with the manufacturer what effects the requested modifications will have on the overall performance of the combination. More modifications are not always better."

These days, the line between custom and shelf pistons have blurred a bit, as race technology continues trickling down to the mainstream. "Over the years, shelf pistons have gained a lot of features that were only found on custom pistons in the past," Chris Madsen of Ross Pistons explains. "We offer options such as gas porting, coatings, and 3D milling on shelf pistons. This means that if you can find a shelf piston that fits, there are more potential applications for them."

Not all power adder combos need power adder pistons. Ross' open chamber big-block Chevy forgings are intended for naturally aspirated applications, but can still handle up to a 250-shot of nitrous.

These days, features once reserved for custom pistons are making their way onto shelf pistons as well. JE's FSR big-block Chevy pistons utilize 3D milling on the underside of the crown to reduce mass. They also feature revised bracing for additional strut tower support. When combined with the shorter wristpins afforded by the revised piston design, the result is a 50-gram weight reduction.

While the major thrust side of a piston endures the brunt of the forced generated during combustion, the primary role of the minor thrust side is to stabilize the piston within the bore. To reduce mass, JE's asymmetrical pistons utilize a smaller skirt on the minor thrust side, and a larger skirt on the major thrust side.

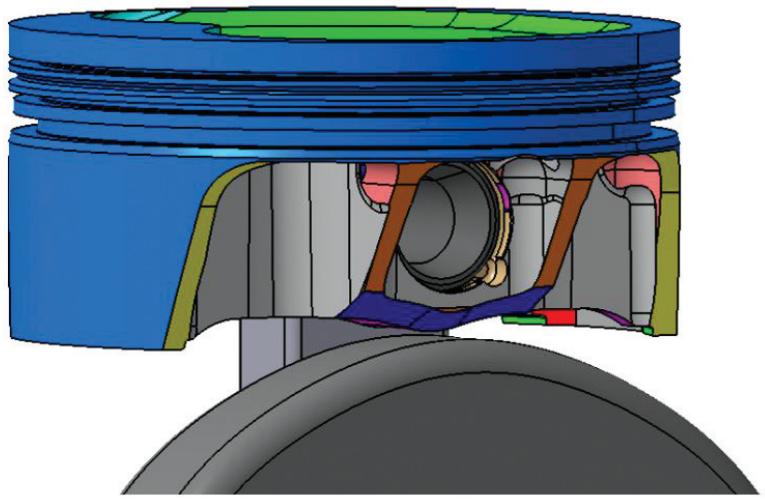

In addition to the bore diameter and block deck height, the stroke, rod length, piston pin diameter, counterweight radius, rod width, and rod thickness above the wrist pin all impact the physical dimensions of a piston. That's why it's imperative to have all the pertinent information ready when ordering up a set of custom pistons.

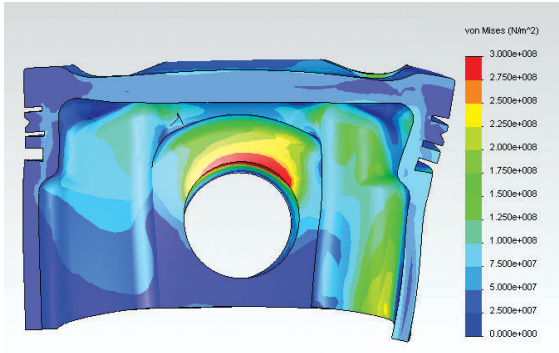

During the design phase of both shelf and custom pistons, manufacturers can simulate thermal and mechanical loads using FEA. With this data a hand, engineers can reinforce the piston structure where necessary, and also identify where weight can be removed.

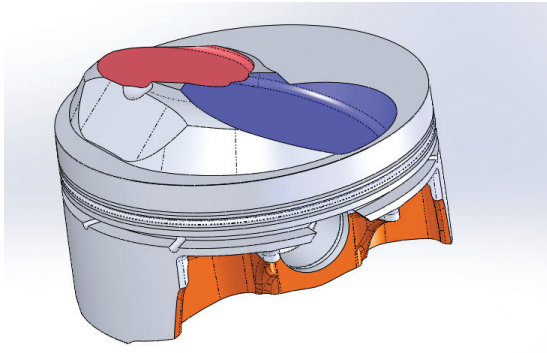

The extensive cylinder head porting commonplace in race motors often involves reworking the combustion chambers. Custom pistons allow perfectly matching the contours of the piston crown to the combustion chamber by digitizing the chambers using a co-ordinate measuring machine.

POWER ADDERS

Due to the extreme heat and cylinder pressure produced by boost and nitrous, custom pistons are very common in power adder applications. Although many of the same benefits of a custom power adder piston are also available in shelf pistons that have been optimized for power adder duty, both benefit from a multitude of structural enhancements. "In general, the more power an engine produces, the more heat and cylinder pressure the piston will need to endure. For obvious reasons, forced induction and nitrous engines typically produce more horsepower and require adjustments to the piston design," JE Pistons' Sean Crawford explains. "Many of the adjustments for forced induction and nitrous engines are related to thicknesses and clearances. To begin, we always utilize 2618 alloy aluminum that we forge in-house. The piston crown, skirt, ring lands and wristpin all receive an increase in thickness to increase strength. At the same time, the piston skirt and ring land clearance to the cylinder wall is increased to allow for more expansion caused by increased temperatures. The piston skirt shapes are specifically designed for forced induction and nitrous application, which see increased side loads. In the case of both nitrous and forced induction engines, we utilize a very durable top ring that is typically made from gas-nitrided carbon steel."

Nevertheless, piston manufacturers must walk a tight rope, as there is a point of diminishing returns. "In most power adder pistons, additional material is added in key high-stress areas. Ring land and crown thickness are typically increased, but remember more is not always better," says Trey McFarland of Mahle. "An excessively large fire land above the top ring can result in uncontrolled combustion in the crevasse area, leading to more frequent detonation. In some extreme applications, forgings with additional material or features are necessary. Heavy duty pins are also common, but you need to be careful here too, because as you reduce pin flex the load is distributed to the piston and the small end of the connecting rod. The rotating assembly is a system where all the components must complement each other. Going too aggressive in one area can compromise another, putting you in a less favorable position than where you started."

Although a piston may look perfectly round to the naked eye, they are purposefully contoured to a slightly elliptical profile. This not only accounts for differences in localized thermal expansion, but also minimizes the contact surface between the piston and cylinder walls in low-load areas to reduce friction, and increases the contact surface in high-stress areas to enhance durability.

MAX EFFORT N/A COMBOS

In naturally aspirated engines built for insanely competitive classes where every last fraction of a horsepower counts, such as NHRA Pro Stock and NASCAR Sprint Cup, custom pistons serve a very different purpose than in power adder combos. "For maximum effort engines that are already well developed, a small amount of friction and a loss of piston stability or ring seal can cost the engine several horsepower. In less refined engines, we could find an extra 15-20 hp through piston design pretty easily," Sean Crawford of JE Pistons explains. "The changes we implement to find these gains is a combination of modified skirt and ring land profiles, extremely tight tolerance in the ring grooves, custom JE Pro Seal top and second rings, and specialized 3D machining of the crown and under-crown area. The 3D machining serves two purposes. First it reduces weight on the under-crown, and second it shapes the crown features for optimal combustion."

According to Mahle, ring seal in max-effort naturally aspirated motors is immensely important from both a horsepower and durability standpoint. "These applications are where R&D and testing really pay off. Application-specific forgings and additional machining can reduce weight, which helps with acceleration," says Trey. "The key areas a piston can contribute to horsepower are ring seal, drag, and consistent performance. Ring seal achieved through flat ring grooves, gas porting and smaller, more conformable rings yield the best results. Coatings can help with reducing drag, but a

proper piston profile will make the biggest difference. At Mahle, we design a specific profile for every application, which aids in increasing performance and consistency while reducing wear. Consistent performance allows the engine to be tuned closer to its limits with less concerns of detonation."

One of the many factors that contribute to ring seal is maintaining piston stability within the bore while also minimizing drag. To account for the difference in expansion rate between the top of the piston and the bottom of the piston, they are typically cam ground into a slightly elliptical shape. Naturally, the amount of taper can impact friction. "Selecting the correct cam and skirt profile is critical. The skirt needs sufficient clearance while minimizing how much of its surface area contacts the cylinder wall," Ross Pistons' Chris Madsen explains. "This keeps parasitic drag to a minimum. The skirt must also maintain stability in the bore to improve ring seal. Ring groove flatness and finish is paramount to achieving outstanding ring seal, and this is accomplished by using the best tooling and machining techniques possible. The better the ring groove finish, the better they will work with today's ultra-thin, back-cut rings. Furthermore, moving the top ring farther up to the deck decreases the dead area above the ring and results in a more efficient combustion cycle."

The volume of dead space between the outside of the piston crown and the cylinder wall isn't too much of a concern in forced induction engines, but it can increase the potential for detonation in naturally aspirated combos. Consequently, custom piston designs often move the top ring closer to the crown, thus decreasing crevasse volume and improving fuel homogenization.

RINGS AND WRISTPINS

Without sufficient cylinder seal, a motor will never fully reach its power potential, and without durable wristpins, catastrophic engine failure is a distinct possibility. Even so, both are often overlooked, or at best, misunderstood. "It is common to hear 'I want the lightweight wristpins you make' when taking an order for a high-power drag race engine. While weight is important, the wristpin's most important job is to withstand and transfer the cylinder pressure being applied to the piston to the connecting rod," says JE Pistons' Sean Crawford. "In addition, the wristpins need to keep the piston from violently crashing into the cylinder head as the piston reaches TDC on the exhaust stroke. These two forces can be very demanding on the wristpin in forced induction and high-rpm engines. Without sufficient wall thickness, the wristpin can flex enough to create additional stress on the piston. If the wristpin is too small in diameter, the pin bores or small end of the connecting rod will not have sufficient surface area to distribute the load, which can cause cracking or galling."

Wristpin flex can lead to much more severe consequences as well. "We have customers always asking for ultra-light pins, but for the most part this is a big mistake," says Chris Madsen of Ross Pistons. "What is needed is the lightest pin available that can perform in its environment without flexing. If that means using a 0.250-inch wall M-series pins, so be it. A flexing pin is damaging pinholes and rod ends as well as scrubbing power. Flexing pins can also contribute to skirt scuffing."

There is, however, a point where a wristpin can be too stiff for its own good. "A pin needs to be strong enough for the application, but caution should be taken in getting the pin too rigid due to material or dimensions. Reducing the flex of the pin redistributes these loads to the piston and the small end of the connecting rod," Trey McFarland of Mahle explains. "A lighter material like titanium will reduce stress on the rod, but can increase stress on the piston and pin itself. There are a number of different materials used in wristpin production that vary greatly in cost. Mahle's slipper skirt forging design utilizes a shorter pin that reduces weight and increases strength without the need for exotic and costly materials."

As for rings, optimizing seal while reducing weight is the name of the game. "Rings are a whole separate subject, but there is a strong move toward smaller, more conformable rings that seal better, weigh less, and produce less drag. Due to the presence of frequent and sometimes aggressive detonation, strong power adder applications may want to consider nitride steel top rings instead of the typical inlayed ring," says Trey.

BILLET VS. FORGED

Traditionally, hot rodders have had a choice between cast and forged pistons. The growing popularity of billet pistons, however, throws yet another variable into the mix. Just as with crankshafts, billet and forged pistons each have pros and cons. "All things being equal, a forged piston is denser and stronger than a billet piston," Mahle's Trey McFarland explains. "On the other hand, working with billet allows for more unrestricted design. Therefore, if a proper forging is not available, a billet will allow for greater design flexibility. On applications with enough volume potential, once a favorable design parameter is reached, a forging is designed for increased strength and reduced lead times."

The ability to quickly create complex designs explains why billet pistons are often preferred by serious racers. "Billet pistons are very common in professional motorsports where a team needs the flexibility to adjust the design without the constraints of a forging. With a billet piston, we can change anything, anywhere on the piston very quickly," says Sean Crawford of JE Pistons. "A forging, however, is a fixed shape and structure that has limits to how much can be changed. For example, if a customer wants to change the strut angle from the pin boss to the skirt panel, or drastically reduce the skirt width, a forging would have limited flexibility while a billet piston could be redesigned quickly to suit their needs. Billet pistons also allow for shapes and cavity depths that are not possible with a simple forging."

ORDERING PROCESS

Once making the determination that custom pistons will best suit your needs, ordering them up for the first time can be a bit intimidating, but it doesn't have to be. "The first step is to gather all of your facts. Determine

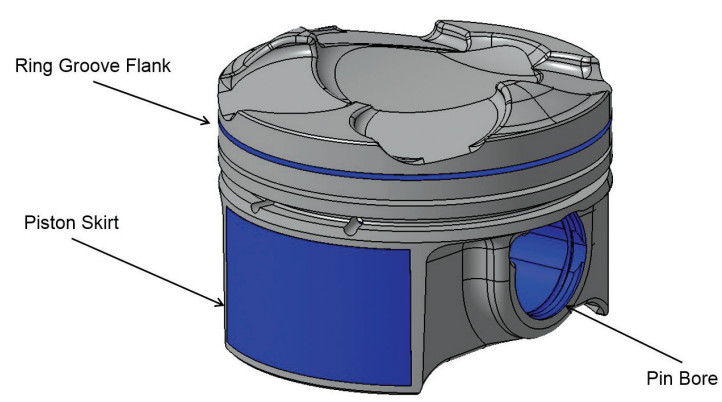

Coatings applied to the piston skirts, pin bores, and ring grooves help reduce friction and scuffing. This was once found only on custom pistons, but coatings have made their way down to shelf applications as well.

Built for a beastly 2,800hp big-block Ford, these custom 2618-alloy Mahle pistons feature extremely thick crowns, and hard-anodized top ring lands that prevent micro-welding while also allowing for tighter vertical ring clearance. The support struts extend from the piston skirts to the pin boss for additional reinforcement and strength. The heavy-wall, tool-steel wrist pins provide serious support for the connecting rods. Mahle's phosphate coating serves as a dry lubricant and gives the pistons their signature gray appearance.

all the engine specs that will affect the piston dimensionally," Sean Crawford of JE Pistons explains. "This includes, but is not limited to, your finished bore size, rod length and small-end dimensions, stroke, cylinder head model, camshaft specs, gasket thickness, block deck height, and desired deck clearance. Next, determine your target horsepower, maximum rpm, expected engine service life, and the type of racing or environment the engine will endure. This sounds like a lot, but fortunately JE has a custom piston order form that asks for all this critical information on our website. Simply complete the form and submit it to your local dealer. If you have questions, you can speak with JE's technical sales team who can walk you through the process."

All piston manufacturers stress the importance of speaking with their tech departments to address any needs or concerns. "I would suggest calling and talking to a tech about your combination before buying anything, as this small step may save you a lot of money and headache in the future," says Ross Pistons' Chris Madsen. "The tech may also recommend a dealer or engine builder to work with who has experience with all the ins and outs of what is needed to be competitive in the class you plan to race in, or what pitfalls to look out for with the engine combination you are looking at building. More than likely, this will also save you money on the piston purchase."

START TO FINISH

After an order for a set of custom pistons comes in, it typically takes between 3-5 weeks before they're boxed up and out the door. "The first step is working with the customer to acquire all the necessary information to ensure the piston is optimized for their application. This information is typically provided on the custom piston order form and through a conversation on the phone," says Sean Crawford of JE Pistons. "Once the customer is confident that all the information has been provided, a technical sales team member takes this information to the engineering team to begin the piston design. At this point, the engineering team determines all the critical dimensions of the pistons including skirt size, thickness and shape; ring land diameter and thickness; crown thickness and shape; valve pocket locations and dimensions; and crown volume. In some cases, the engineering team may perform finite element analysis (FEA) to simulate thermal and mechanical stresses the pistons will experience in operation. The engineering team also works closely with the manufacturing team to complete any CNC programming necessary. Once submitted to manufacturing, the first step is to pull the forgings from inventory. From there, the forgings complete a series of CNC operations to machine each of the features on the piston. After each operation, JE utilizes in-process inspection to ensure quality at every step. Every measurement is signed off by each machinist who receives the pistons. Once all machining is completed, the pistons are hand-deburred, then sent through a final wash before moving on to final inspection. The pistons are then evaluated one last time, packaged, and shipped to the customer."

Due to the lead time necessary to manufacture custom pistons, ordering a few extra pistons as backup units buys some much-needed insurance, especially in extreme power adder applications. The last thing any racer wants is a four-week lead time for one or two replacement pistons when the next race is just two weeks away. "Lead times vary depending on the time of year and the complexity of the piston design," says Beeri Meza of Arias Pistons. "A flat-top piston for a 350 Chevy can get done in three- to four weeks, whereas a lightweight, high-compression Ford Boss 302 piston may take four- to five weeks. Coatings add another week to the process as well." **FSC**

To help endure the extreme heat and cylinder pressure generated by turbocharging, the custom Mahle pistons are matched with nitrided stainless steel top rings and a ductile iron second ring. When combined with hard-anodized top ring lands, the potential for losing ring seal due to micro-welding is dramatically reduced.

//SOURCES

Arias Pistons
310-532-9737
Ariaspistons.com

MAHLE/Clevite
888-255-1942
Mahlemotorsports.com

JE Pistons
714-898-9764
Jepistons.com

Ross Racing Pistons
310-536-0100
Rosspistons.com